RAL 2825 - 3025

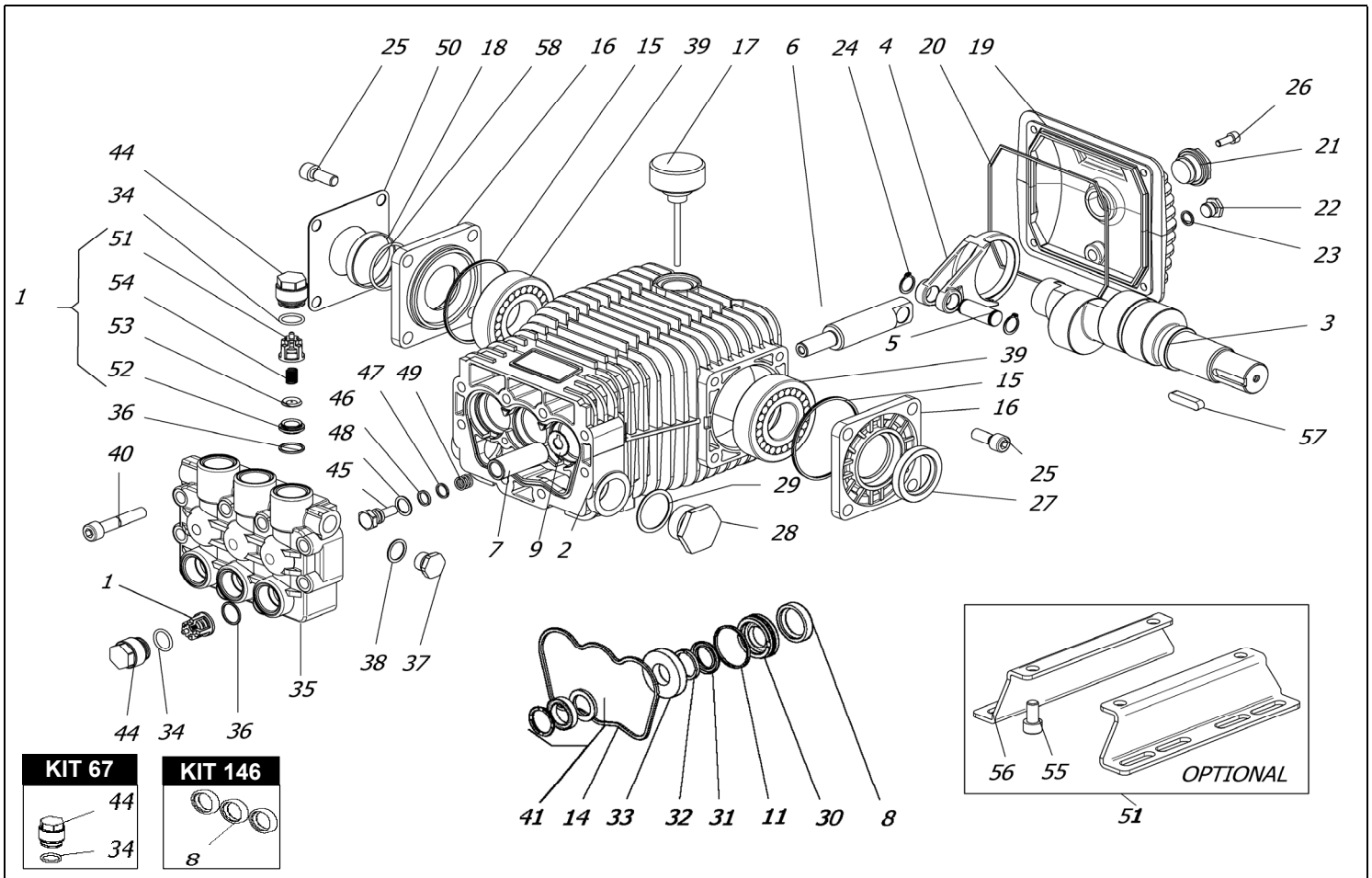

POS.	CODICE PART NO. RÉF.	DENOMINAZIONE - DESCRIPTION - DESCRIPTION	Q.TY
1-kit 148	089806973	VALVES ASSEMBLY	6
1-kit 162	089800973	STAINLESS STEEL VALVES ASSEMBLY (OPTIONAL	6
2	080001092	PUMP CRANKCASE	1
3	080038262	CRANKSHAFT RAL 3025	1
3	080037262	CRANKSHAFT RAL 2825	1
4	080007112	CONNECTING ROD	3
5	060007492	PISTON PIN	3
6	080014512	PLUNGER ROD	3
7	080010182	CERAMIC PISTON D.22	3
8-kit 146-Kit 147	802092002	OIL SEAL	3
9	060018682	WASHER	3
11-kit 154-155	803080102	O-RING	3
14-kit 154-155	080021312	PARTICULAR PROFILE GASKET	1
15-kit 147	803210642	O-RING	2
16	060017092	BEARING COVER	2
17	060020322	OIL FILLER PLUG WITH DIP STICK	1
18-kit 147	060059322	OIL SIGHT GLASS	1
19	080006092	CRANKCASE COVER	1
20-kit 147	803210882	O-RING	1
21-kit 147	853515502	OIL SIGHT GLASS + O-RING	1
22	852543502	PLUG G1/4X9	1
23-kit 147	803057002	O-RING	1
24	801099002	CIRCLIP	6
25	863265002	BOLT	8
26	862108002	BOLT	4
27-kit 147	802143002	OIL SEAL	1
28	852712002	PLUG G1	1
28	852712532	PLUG G1 BRASS (OPTIONAL)	1
29	824230002	GASKET	1
30-kit 154	080016532	BACK GLAND	3
31-kit 154-155	802087002	"V" PACKING 22-32	3

POS.	CODICE PART NO. RÉF.	DENOMINAZIONE - DESCRIPTION - DESCRIPTION	Q.TY
32-kit 154-155	060012322	THRUST RING	3
33-kit 154	080019532	FRONT GLAND	3
34-kit 67	803182802	O-RING	6
35	080062282	PUMP HEAD	1
36-kit 148-162	803069002	O-RING	6
37	852579002	PLUG G3/8	1
37	852579532	PLUG G3/8 BRASS (OPTIONAL)	1
38	824109002	GASKET	1
39	812870002	BEARING	2
40	863510002	BOLT	8
41-kit 154-155	802085402	SUPER "U"PACKING ASSEMBLY D.22-35	3
44-kit 67	070040532	VALVE CAP	6
45	080050512	BOLT	3
46	803058002	O-RING	3
47	803902002	ANTI-EXTRUSION RING	3
48	843646002	COPPER WASHER	3
49	080051512	SPRING	3
50	060123612	SHEET	1
51	089829973	MOUNTING RAILS KIT (OPTIONAL)	1
55	863212002	BOLT	4
56	080053612	MOUNTING RAIL (OPTIONAL)	2
57	806534002	TAB 8X7X35	1
58-kit 147	803265002	O-RING	1

REPAIR KIT	NO.s INCLUDED		PCS.
kit 67	049839973	SPARE PARTS KIT	12
kit 146	089816973	SPARE PARTS KIT	3
kit 147	089817973	SPARE PARTS KIT	11
kit 148	089818973	SPARE PARTS KIT	12
kit 154	089824973	SPARE PARTS KIT	25
kit 155	089825973	SPARE PARTS KIT	19
kit 162	089833973	SPARE PARTS KIT (OPTIONAL)	12